I-93 South: Canton—Braintree

I-93 South: Canton—Braintree
I-95, Canton, to Route 24, Randolph

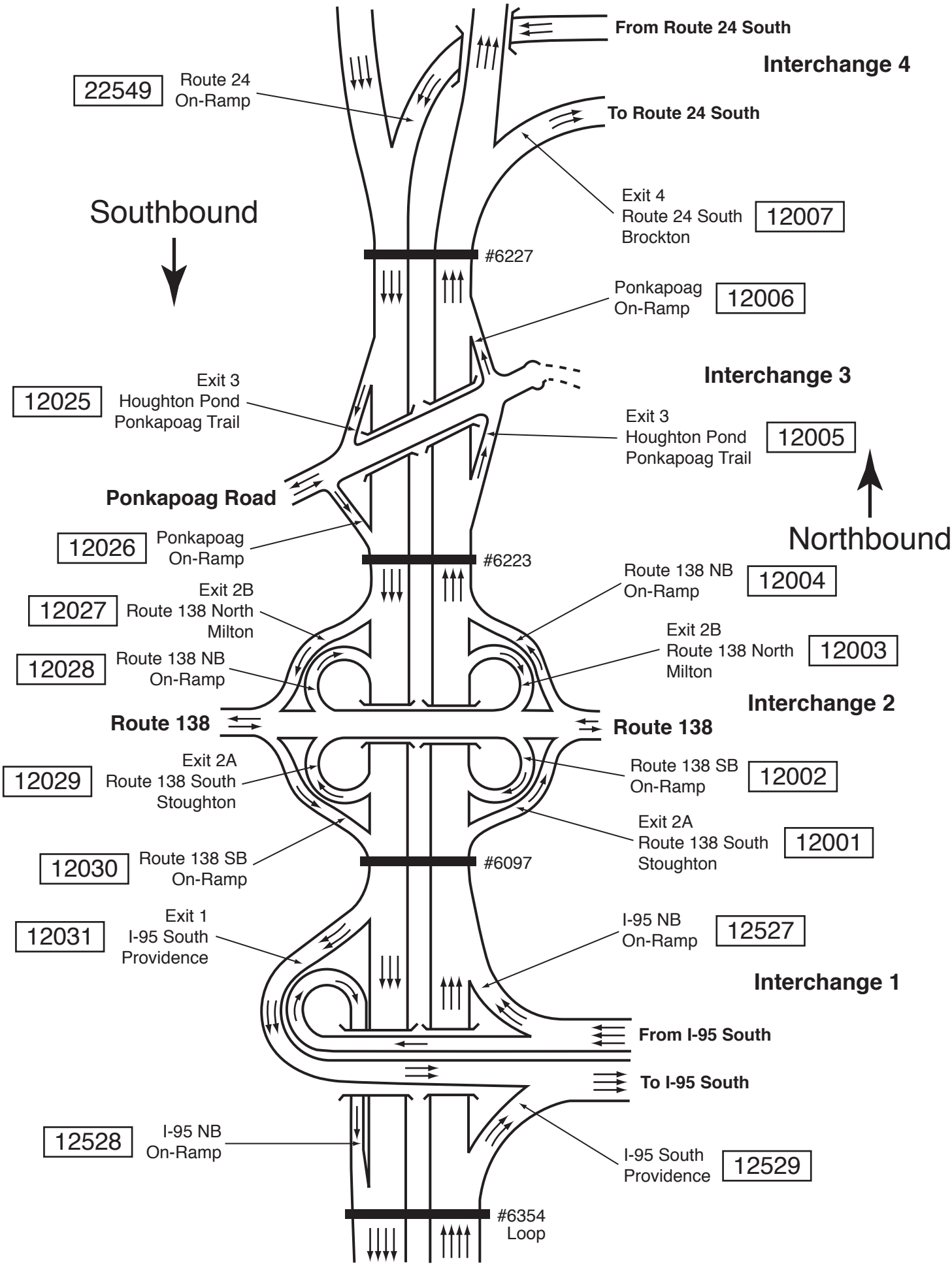
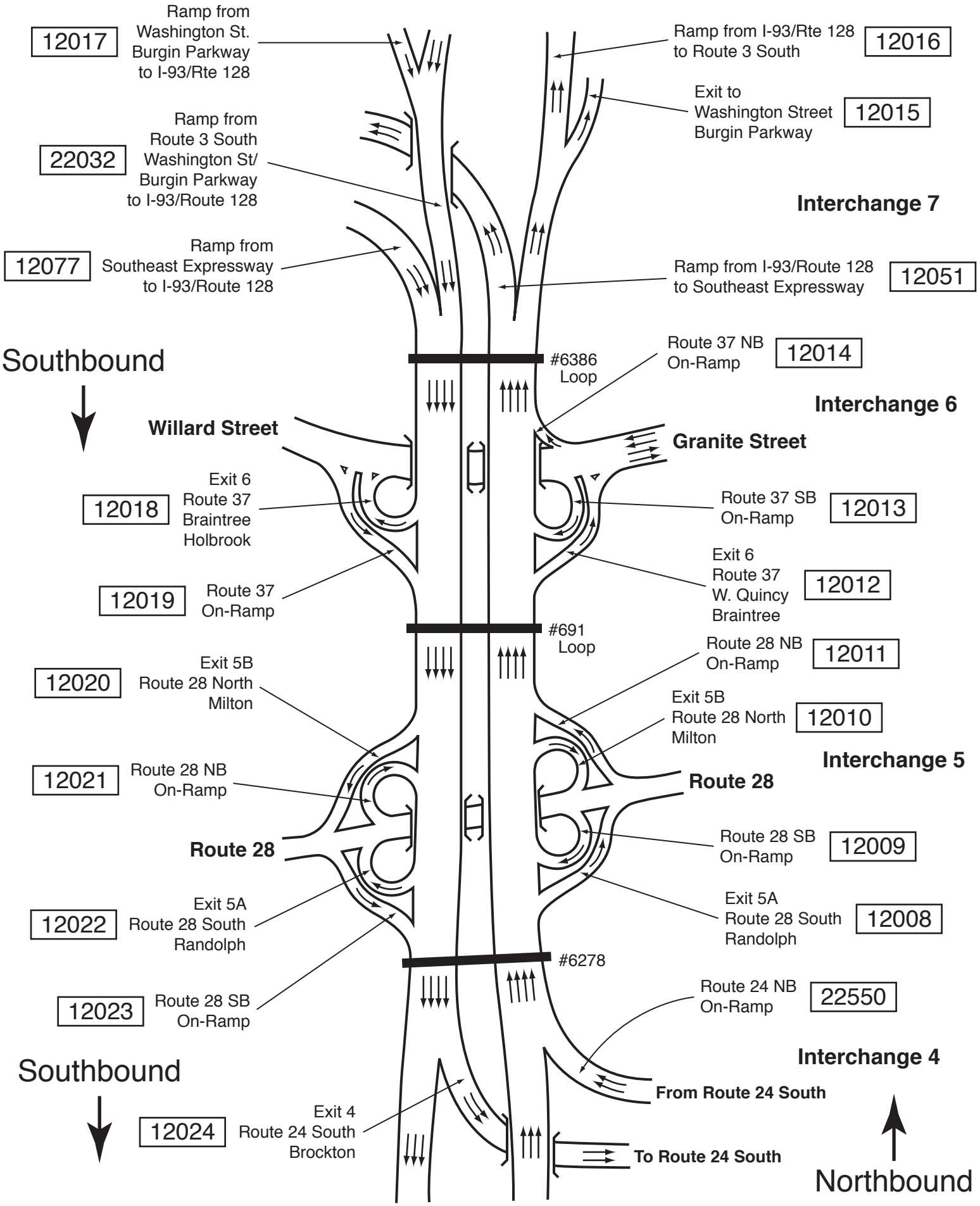
I-93 South: Canton—Braintree
Route 24, Randolph, to Braintree Split, Braintree